TIMING IN SRAM

CIRCUIT FOR CALCULATION OF SRAM DELAY

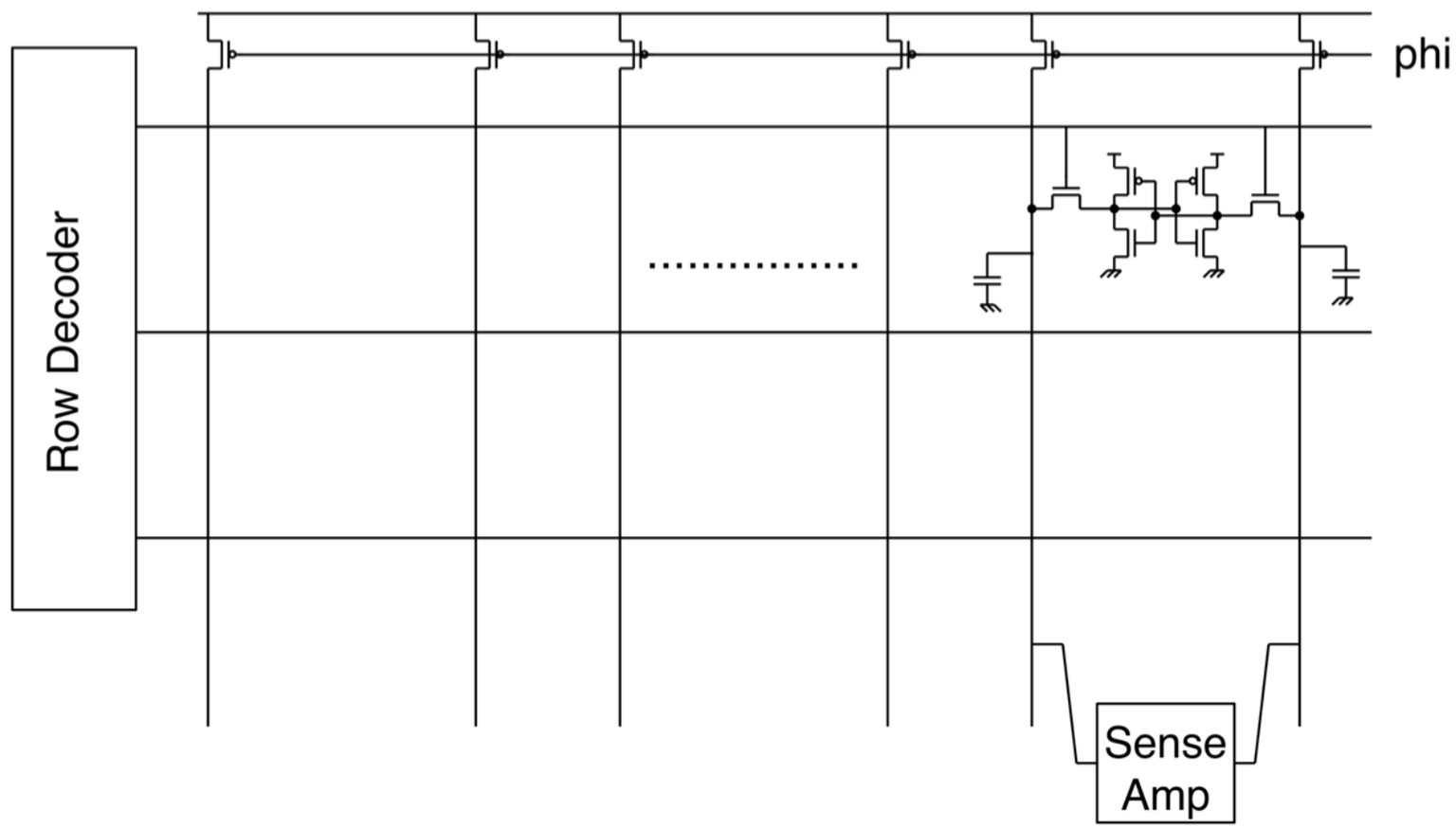

- Once the cell establishes enough differential potential
  - Fire up the sense amplifier, it will quickly do the rest

READ TIME DELAY IN SRAM

- $t_{read} = t_{pre} + t_{WL} + t_{Cell} + t_{SA}$

- $t_{pre} and\ t_{WL}$ are similar to NOR
- t_{Cell} is different

CELL DELAY

- The time constant is diminished by the ratio of necessary swing versus full swing
- How much is “enough” bit line difference?

$$0.69 * R_{cell} C_{BL} \frac{\Delta V_{BL}}{V_{DD}}$$

GENERAL COMMENTS

- All previous memories are considered asynchronous
- Where is the clock?
- How do you guarantee the sequence?
- Who starts the reading process? Change in address
- Change in address will trigger the sequence

SELF TIMING IN SRAM

- A change in address triggers the sequence
- Phi immediately enabled
- After line fully precharged, enable word line
- After enough bit line delta established enable sense amplifier
- After sense amplifier delay, enable column decoder

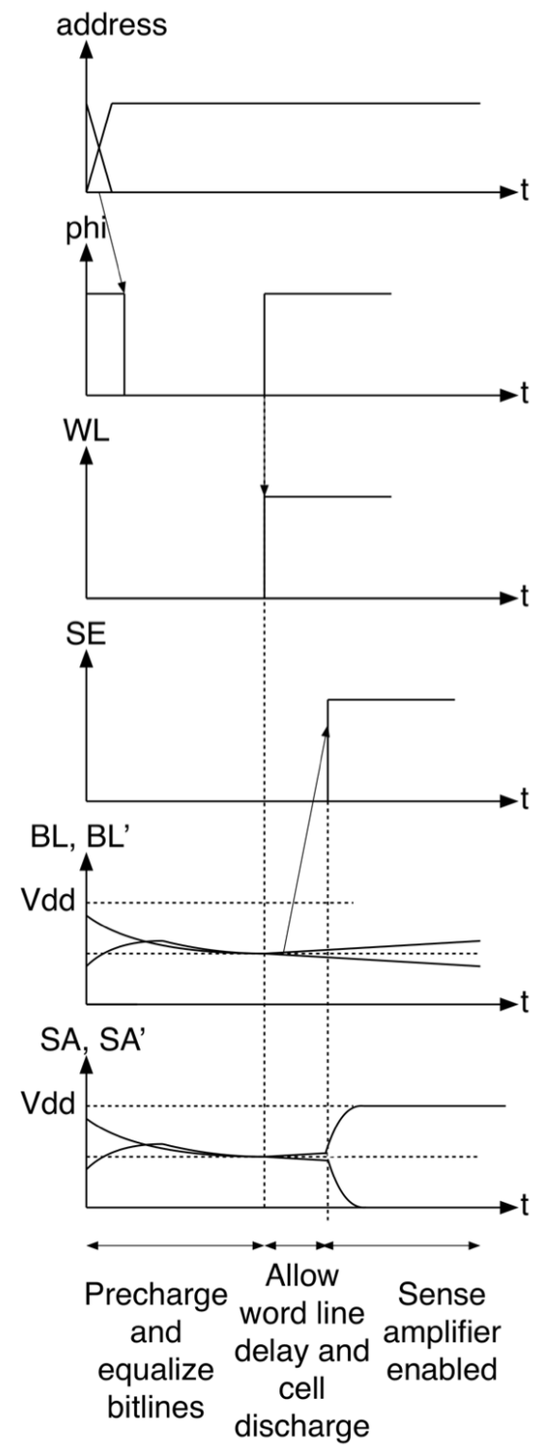

ADDRESS CHANGE DETECTOR

- XOR the data with a delayed version of it.
- The output will be “1” if any bit has changed
- Delay: by a clock if there is a system clock or combinational delay

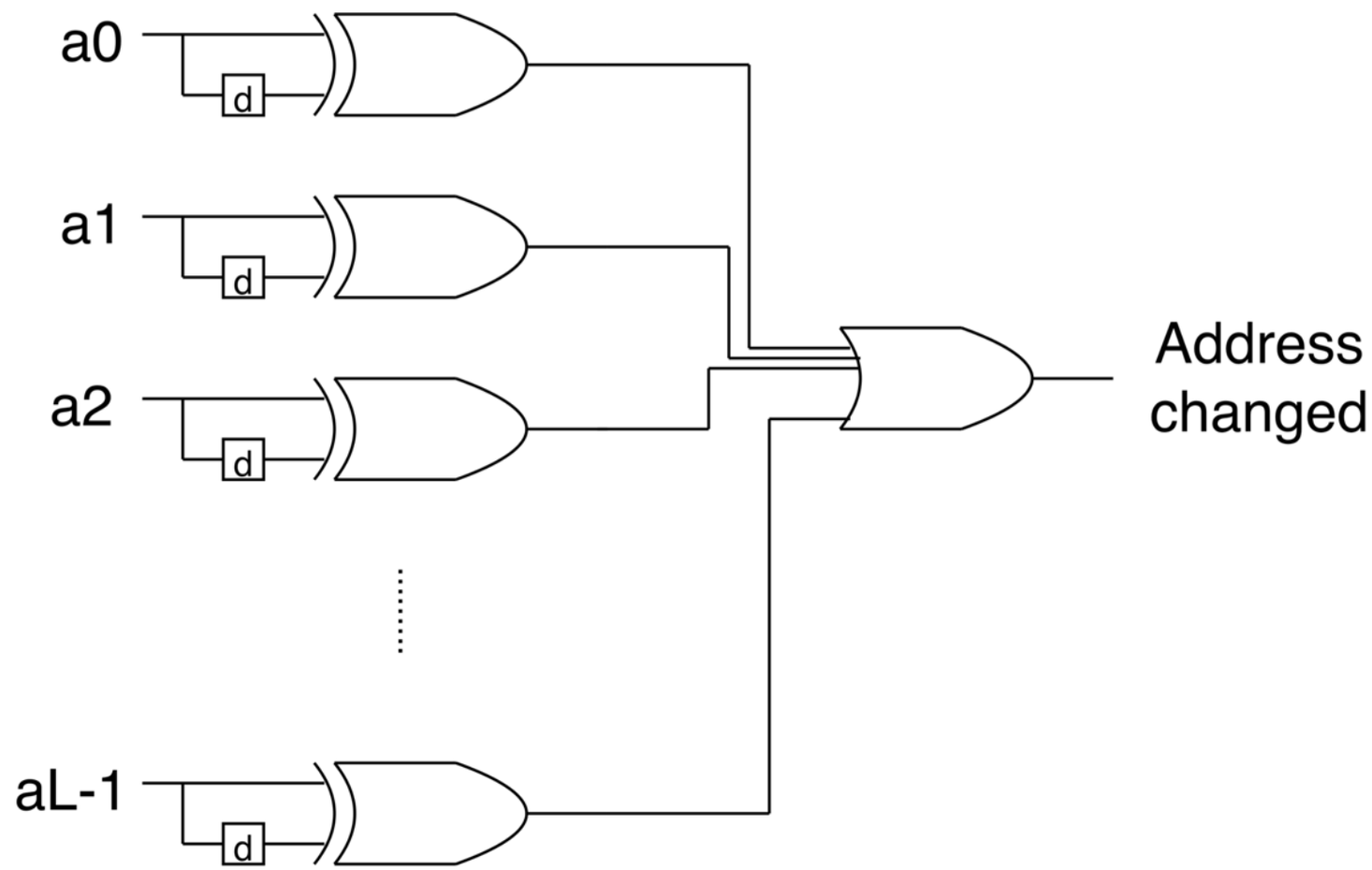

WHY BIT LINE EQUALIZATION IS CRITICAL

- Phi will be zero until equalization occurs
- Equalizing the BL and BL’ ensure minimum delay

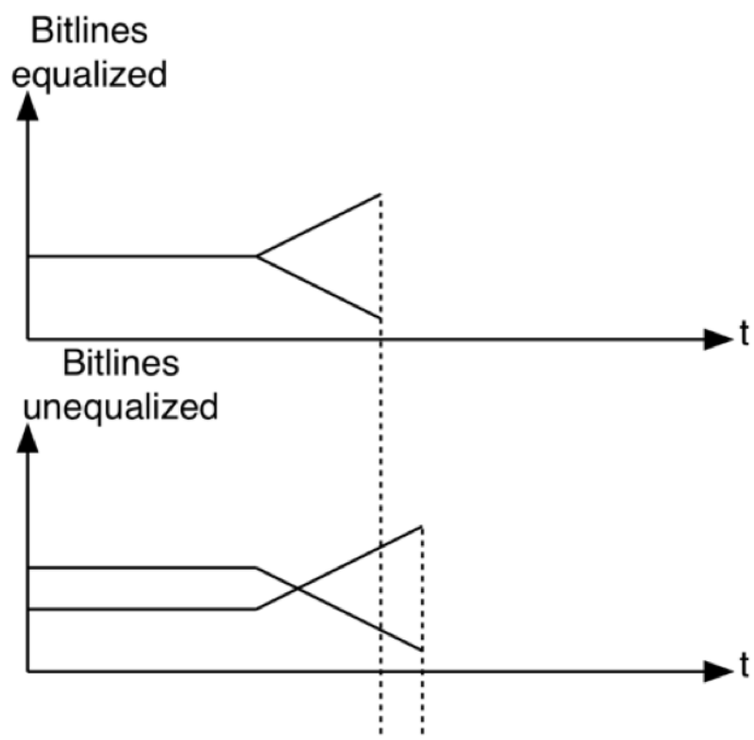

- After equalization, you can enable the row decoder by the phi signal

DELAY MATCHING PATH

- How can you derive SE signal?
- Dummy row decoder replica and dummy cell delay replica
- Allow sense amp to be triggered right
- Very difficult to simulate loading

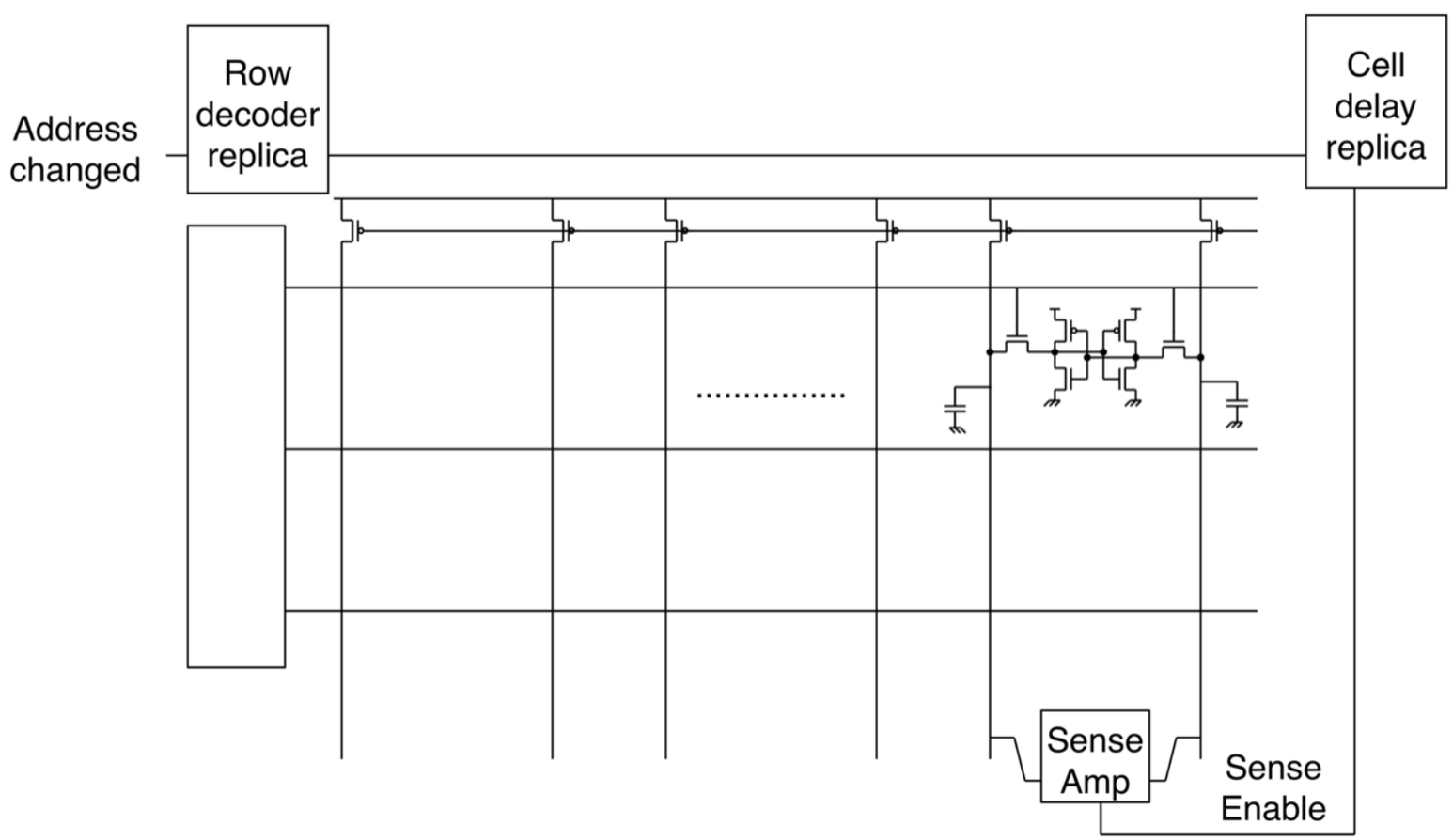

ROW DECODER REPLICA

- Necessary to mimic effort and fanout of NAND gates
  - Inverters strangled to simulate

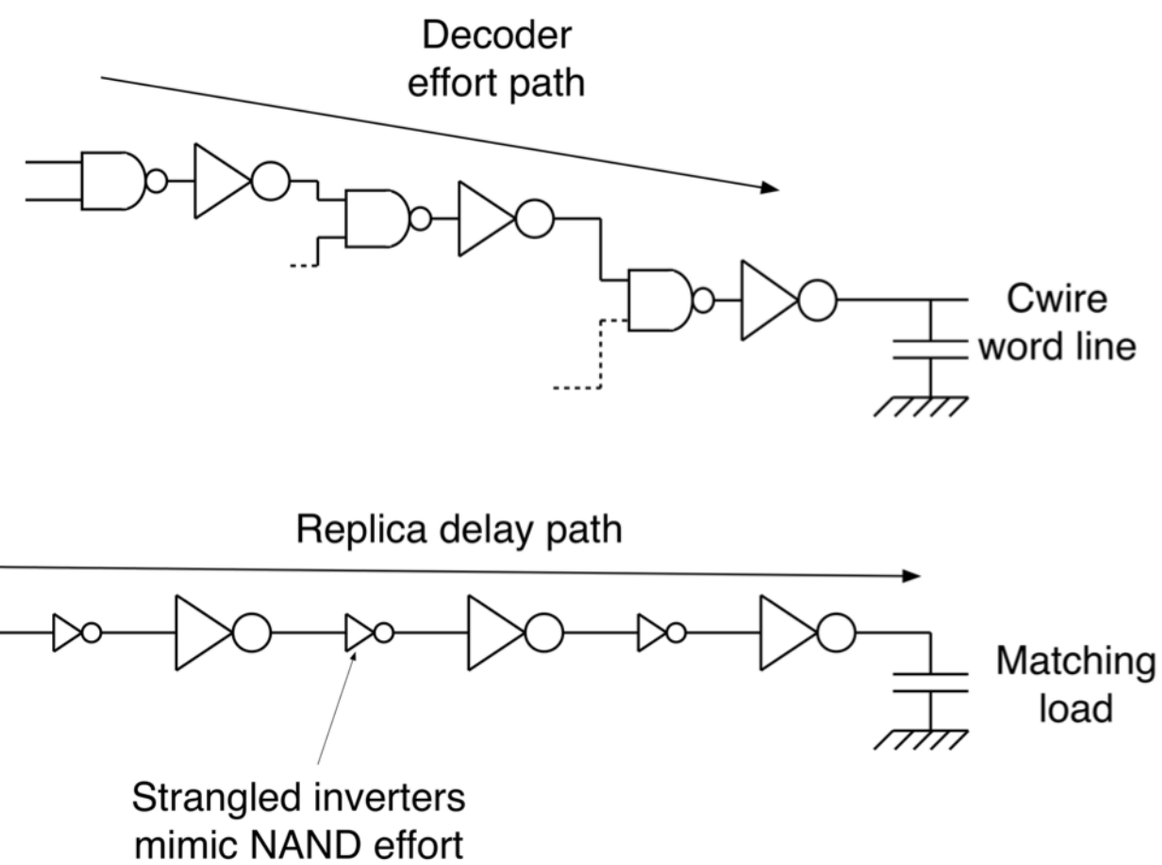

CELL DELAY REPLICA

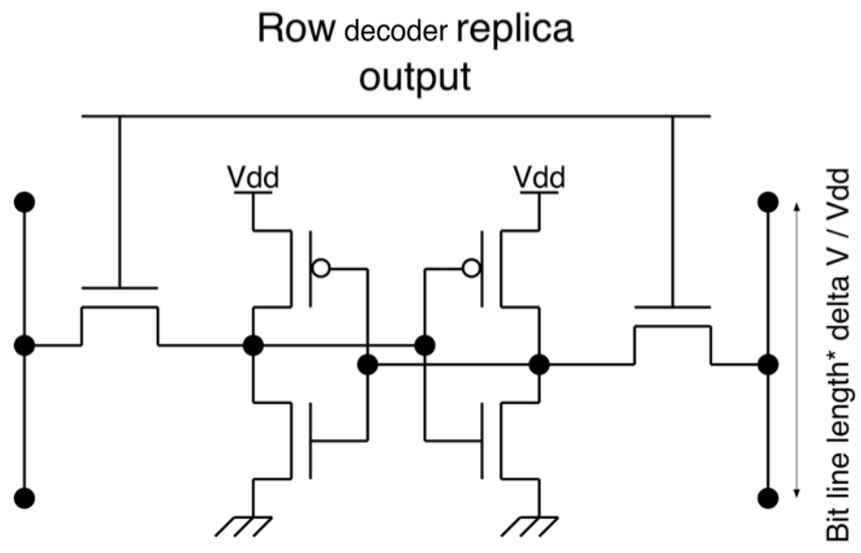

- Fortunately do not need to load the cell with an entire bit line